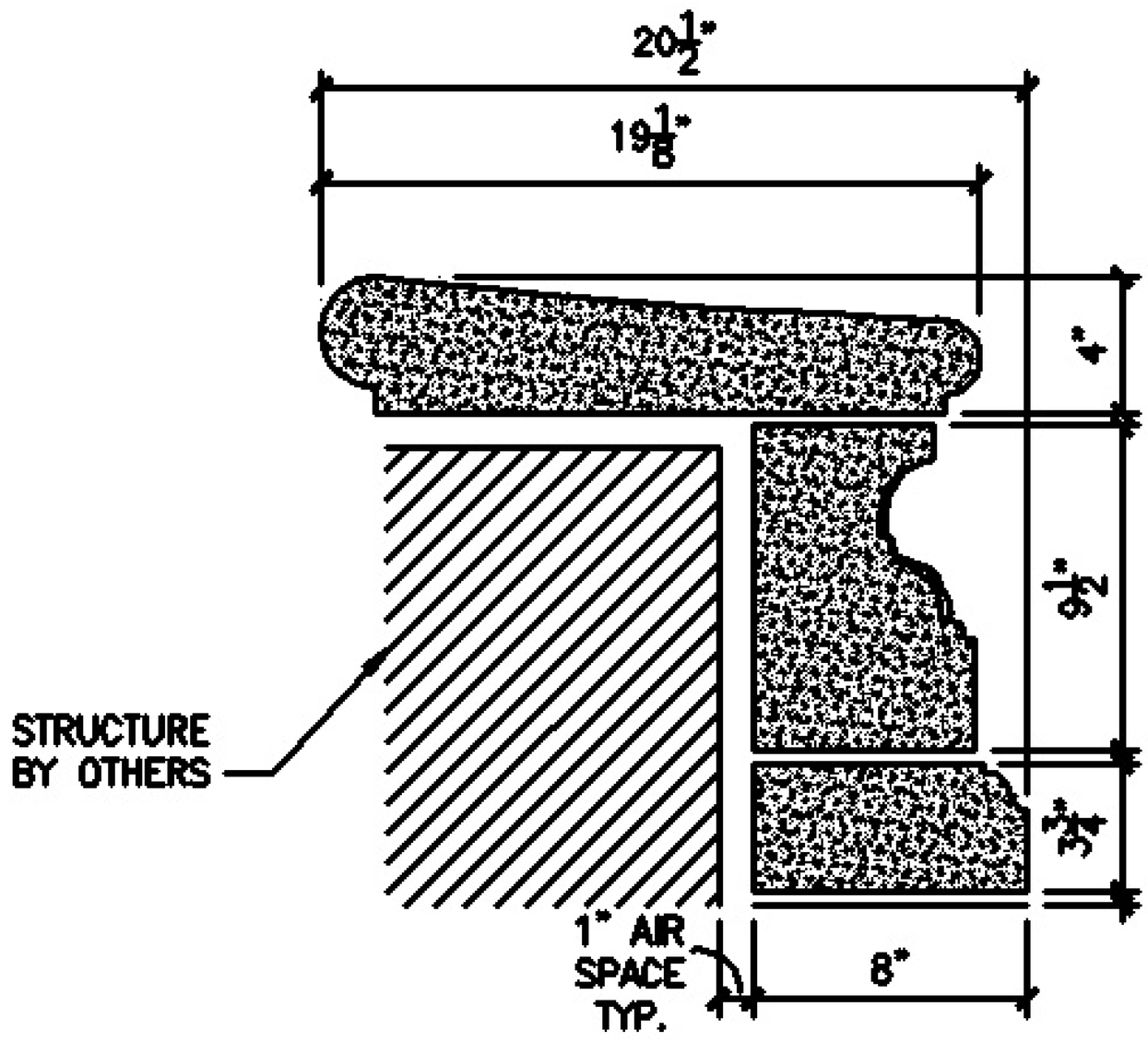


1 SECTION VIEW

STD. 3/8" MORTAR JOINTS

Unit ID: 15543